AUDIO (6)

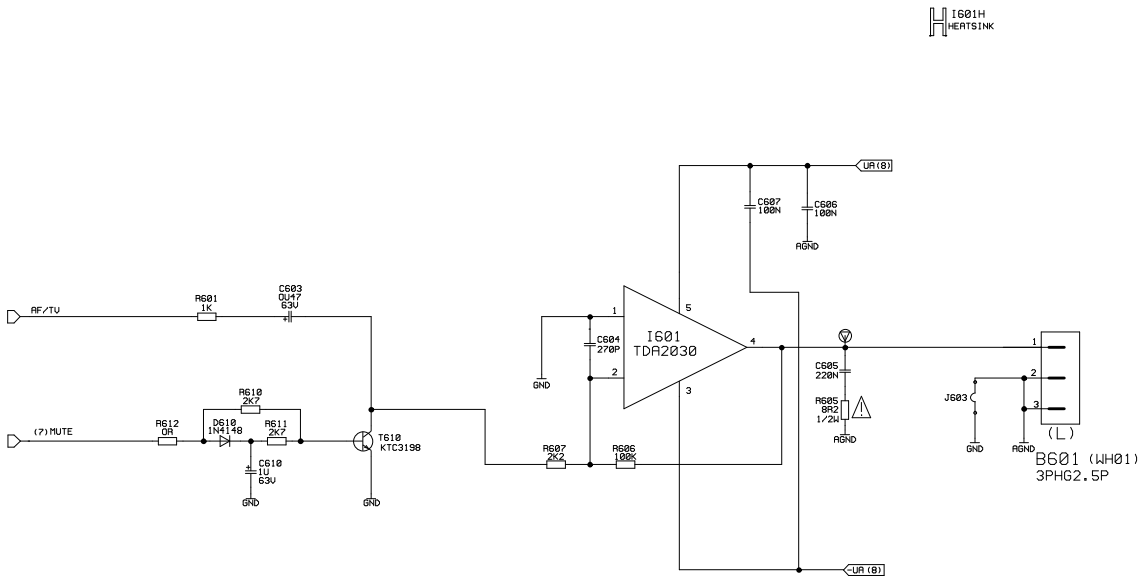

* COMPONENTS NOT USED

DS Multimedia Pte Ltd	Drawing : DT984AMP	Index	Date
	DT984 AUDIO AMPLIFIER	VER 0.0	11 MAY 2000